Work Order ID 103391

Monday, June 24, 2013 11:44:10 AM

103391

Item ID: D3914-041 **Accept** *N900040100* **Setup Start** *NS1*

Revision ID: **Stop** *NS2*

Item Name: Long Basket Lid Assembly (350)

Start Date: 6/24/2013 **Start Qty:** 1.00 *1*

Required Date: 7/5/2013 **Req'd Qty:** 1.00 *1*

Reference:

Cust Item ID:

Customer:

Approvals: **Process Plan:** M **Date:** 13-06-24 **Tooling:** **Date:**

QC: **Date:** **SPC (Y/N):** **Date:**

Run Start *NR1*

Stop *NR2*

Sequence ID/ Work Center ID	Operation Description	Set Up/ Run Hours	Tool ID	Tool #	Plan Code	Accept Qty	Reject Qty	Reject Number	Insp. Stamp
Draw Nbr	**Revision Nbr**								
D3914	C								
D4020	A								
100	Weld per dwg A/R S.S. rod Batch: H10816	0.00							
100	- Large Fab								
Large Fab	**Memo**	0.00							
Large Fab	1- assemble ribs , weld as per dwg D3914 using DT9607A								
	2- weld hinge (3) and Mounting brackets as per dwg D3914								
	Visual inspect before welding mesh								
	3- tack weld mesh on basket as per dwg D3914								
	Cut out mesh where label plate goes in center off basket lid as per dwg D4020-5. Make sure to place mesh correctly on lid, check with label plate before tacking mesh								
110	QC9- Inspect visual per QSI004- Fusion Welds	0.00							
110									
QC	**Memo**	0.00							
Quality Control									

① 13-08-15 RD

PL 13-8-15 (1x)

DQA: _____ Date: _____

NCR: Yes / No

WORK ORDER NON-CONFORMANCE / UPDATE

QA Closed: Date:

Work Order: _____

Part No. _____

NCR No. _____

DISPOSITION

- Rework ☐
- Scrap ☐
- Use-as-is ☐
- Work Order Update ☐

AGAINST DEPARTMENT/PROCESS

- Skid-tube ☐
- Machining ☐
- Thermoforming ☐
- Large Fab ☐
- Crosstube ☐
- Small Fab ☐
- Finishing ☐
- Composite ☐
- Water Jet ☐
- Prod. Eng. Coor. ☐
- Rec/Store/Packaging ☐
- Supplier ☐
- Engineering ☐
- Quality ☐
- Other ☐

Root Cause		Date	Step	Qty	Description of work order update or Non-conformance	Initial Chief Eng	Action Description	Sign & Date	Verification	QC Inspector
Doc/Data	☐									
Equip/Tooling	☐									
Operator	☐									
Material	☐									
Setup	☐									
Other	☐									
Process	☐									
Supplier	☐									
Training	☐									
Unapproved	☐									

FAULT CATEGORY

Landing Gear

- ☐ Bending
- ☐ Centre Not Concentric to O/S
- ☐ Cracks
- ☐ Crushed/Crimped
- ☐ Cuffs
- ☐ Heat Treat
- ☐ Inspection Strip in Tube
- ☐ Ripples in Bend
- ☐ Torque Waves in Extrusion
- ☐ Turning Sequence
- ☐ Wave/Twist in Tube

General

- ☐ Bend
- ☐ BOM/Route
- ☐ Broken/Damaged
- ☐ Burrs
- ☐ Contamination
- ☐ Countersink
- ☐ Cut Too Short
- ☐ Drill Holes
- ☐ Drawing
- ☐ Finish
- ☐ Folio
- ☐ Grain
- ☐ Hardware
- ☐ Inspection Incomplete
- ☐ Instructions Incomplete/Unclear
- ☐ Maintenance
- ☐ Mislabeled
- ☐ Misread
- ☐ Offset
- ☐ Out of Calibration
- ☐ Out of Sequence
- ☐ Outside Dimensions
- ☐ Ovalized
- ☐ Over/Under tolerance
- ☐ Part Incorrect
- ☐ Part Lost/Missing
- ☐ Part Moved
- ☐ Positioned Wrong
- ☐ Power Loss/Surge
- ☐ Pressure/Forced
- ☐ Temperature/Cure
- ☐ Weld
- ☐ Wrong Stock Pulled
- ☐ Other

_____

_____

_____

Work Order ID 103391 *103391*

Monday, June 24, 2013 11:44:10 AM

Item ID: D3914-041 **Accept** *N900040100* **Setup Start** *NS1*

Revision ID:

Item Name: Long Basket Lid Assembly (350) **Stop** *NS2*

Start Date: 6/24/2013 **Start Qty:** 1.00 *1* **Cust Item ID:**

Required Date: 7/5/2013 **Req'd Qty:** 1.00 *1* **Customer:**

Reference:

Run Start *NR1*

Approvals: **Process Plan:** _____ **Date:** _____ **Tooling:** _____ **Date:** _____

QC: _____ **Date:** _____ **SPC (Y/N):** _____ **Date:** _____ **Stop** *NR2*

Sequence ID/ Work Center ID	Operation Description	Set Up/ Run Hours	Tool ID	Tool #	Plan Code	Accept Qty	Reject Qty	Reject Number	Insp. Stamp
120 *120* QC Quality Control	QC5- Inspect part completeness to step on W/O	0.00							
	Memo	0.00							
130 *130* Powdercoat Powder Coating	Black Sandtex(Ref:4.3.5.7) per QSI005 4.3	0.00							
	Memo	0.00							
140 *140* HandFinish Hand Finishing	Wing Walk as per dwg QSI005 4.4 Batch	0.00							
	Memo	0.00							

Cpl 13.8.15 1x

1X Ø Mf 13/08/15

1.00

*** mask sides of hinge prior to powdercoat***
Start Time: 1
Oven Temperature: 320 °F
Finish Time: 1:30

M117338

M 126263

1 Ø Bl 13-8-20.

1- Mask data plate and apply wing walk on outside surface of mesh as per dwg

2- Install placard and label as per dwg
***Mask label plate to size of label, use scotchbrite red pad to lightly sand area for label, apply label ***

DQA: _____ Date: _____

NCR: Yes / No

WORK ORDER NON-CONFORMANCE / UPDATE

QA Closed: Date:

Work Order: _____

Part No. _____

NCR No. _____

DISPOSITION

- Rework ☐
- Scrap ☐
- Use-as-is ☐
- Work Order Update ☐

AGAINST DEPARTMENT/PROCESS

- Skid-tube ☐
- Machining ☐
- Thermoforming ☐
- Large Fab ☐
- Crosstube ☐
- Small Fab ☐
- Finishing ☐
- Composite ☐
- Water Jet ☐
- Prod. Eng. Coor. ☐
- Rec/Store/Packaging ☐
- Supplier ☐
- Engineering ☐
- Quality ☐
- Other ☐
- ☐

Root Cause		Date	Step	Qty	Description of work order update or Non-conformance	Initial Chief Eng	Action Description	Sign & Date	Verification	QC Inspector
Doc/Data	☐									
Equip/Tooling	☐									
Operator	☐									
Material	☐									
Setup	☐									
Other	☐									
Process	☐									
Supplier	☐									
Training	☐									
Unapproved	☐									

FAULT CATEGORY

Landing Gear

- ☐ Bending
- ☐ Centre Not Concentric to O/S
- ☐ Cracks
- ☐ Crushed/Crimped
- ☐ Cuffs
- ☐ Heat Treat
- ☐ Inspection Strip in Tube
- ☐ Ripples in Bend
- ☐ Torque Waves in Extrusion
- ☐ Turning Sequence
- ☐ Wave/Twist in Tube

General

- ☐ Bend
- ☐ BOM/Route
- ☐ Broken/Damaged
- ☐ Burrs
- ☐ Contamination
- ☐ Countersink
- ☐ Cut Too Short
- ☐ Drill Holes
- ☐ Drawing
- ☐ Finish
- ☐ Folio
- ☐ Grain
- ☐ Hardware
- ☐ Inspection Incomplete
- ☐ Instructions Incomplete/Unclear
- ☐ Maintenance
- ☐ Mislabeled
- ☐ Misread
- ☐ Offset
- ☐ Out of Calibration
- ☐ Out of Sequence
- ☐ Outside Dimensions
- ☐ Ovalized
- ☐ Over/Under tolerance
- ☐ Part Incorrect
- ☐ Part Lost/Missing
- ☐ Part Moved
- ☐ Positioned Wrong
- ☐ Power Loss/Surge
- ☐ Pressure/Forced
- ☐ Temperature/Cure
- ☐ Weld
- ☐ Wrong Stock Pulled
- ☐ Other

_____

_____

_____

Work Order ID 103391

103391

Monday, June 24, 2013 11:44:10 AM

Item ID: D3914-041 **Accept** *N900040100* **Setup Start** *NS1*

Revision ID:

Item Name: Long Basket Lid Assembly (350) **Stop** *NS2*

Start Date: 6/24/2013 **Start Qty:** 1.00 *1*

Required Date: 7/5/2013 **Req'd Qty:** 1.00 *1*

Reference:

Cust Item ID:

Customer:

Run Start *NR1*

Stop *NR2*

Approvals: **Process Plan:** ____ **Date:** ____ **Tooling:** ____ **Date:** ____

QC: ____ **Date:** ____ **SPC (Y/N):** ____ **Date:** ____

Sequence ID/ Work Center ID	Operation Description	Set Up/ Run Hours	Tool ID	Tool #	Plan Code	Accept Qty	Reject Qty	Reject Number	Insp. Stamp
150	QC3- Inspect Part Finish	0.00				1			
150									
QC	Memo	0.00							
Quality Control									

DAS 27 9-89

B 8.20

160	Identify as per dwg & Stock Location D1030-014	0.00	100365			1	0	BK 13-8-20	
160									
Packaging	Memo	0.00							
Packaging									

170	QC21- Final Inspection - Work Order Release	0.00				MLJ 13-08-21			
170									
QC	Memo	0.00							
Quality Control									

MLJ 13-08-20

DQA: _____ Date: _____

NCR: Yes / No

WORK ORDER NON-CONFORMANCE / UPDATE

QA Closed: Date:

Work Order: _____

Part No. _____

NCR No. _____

DISPOSITION

- Rework ☐
- Scrap ☐
- Use-as-is ☐
- Work Order Update ☐

AGAINST DEPARTMENT/PROCESS

- Skid-tube ☐
- Crosstube ☐
- Water Jet ☐
- Engineering ☐
- Machining ☐
- Small Fab ☐
- Prod. Eng. Coor. ☐
- Quality ☐
- Thermoforming ☐
- Finishing ☐
- Rec/Store/Packaging ☐
- Other ☐
- Large Fab ☐
- Composite ☐
- Supplier ☐
- ☐

Root Cause		Date	Step	Qty	Description of work order update or Non-conformance	Initial Chief Eng	Action Description	Sign & Date	Verification	QC Inspector
Doc/Data	☐									
Equip/Tooling	☐									
Operator	☐									
Material	☐									
Setup	☐									
Other	☐									
Process	☐									
Supplier	☐									
Training	☐									
Unapproved	☐									

FAULT CATEGORY

Landing Gear

- ☐ Bending
- ☐ Centre Not Concentric to O/S
- ☐ Cracks
- ☐ Crushed/Crimped
- ☐ Cuffs
- ☐ Heat Treat
- ☐ Inspection Strip in Tube
- ☐ Ripples in Bend
- ☐ Torque Waves in Extrusion
- ☐ Turning Sequence
- ☐ Wave/Twist in Tube

General

- ☐ Bend
- ☐ BOM/Route
- ☐ Broken/Damaged
- ☐ Burrs
- ☐ Contamination
- ☐ Countersink
- ☐ Cut Too Short
- ☐ Drill Holes
- ☐ Drawing
- ☐ Finish
- ☐ Folio
- ☐ Grain
- ☐ Hardware
- ☐ Inspection Incomplete
- ☐ Instructions Incomplete/Unclear
- ☐ Maintenance
- ☐ Mislabeled
- ☐ Misread
- ☐ Offset
- ☐ Out of Calibration
- ☐ Out of Sequence
- ☐ Outside Dimensions
- ☐ Ovalized
- ☐ Over/Under tolerance
- ☐ Part Incorrect
- ☐ Part Lost/Missing
- ☐ Part Moved
- ☐ Positioned Wrong
- ☐ Power Loss/Surge
- ☐ Pressure/Forced
- ☐ Temperature/Cure
- ☐ Weld
- ☐ Wrong Stock Pulled
- ☐ Other

_____

_____

_____

Picklist Print

3

Monday, June 24, 2013 11:44:51 AM

Work Order ID: 103391 *103391*

Parent Item: D3914-041 *D3914-041*

Parent Item Name: Long Basket Lid Assembly (350)

Start Date: 6/24/2013 **Required Date:** 7/5/2013

Start Qty: 1.00 **Required Qty:** 1.00

Comments: IPP Rev:A new issue DD 10.03.19 verified by:EC IPP Rev:B as per dwg revB DD 10.08.18 verified by:EC IPP Rev:C 13.03.14 AS PER DWG REV.pc1 DD VERF:JLM IPP REV:D 13.06.21 DWG REV.C DD VERF:JFS

Component Item ID/ Item Name	Replacement Item ID	Mfg/ Purch	Bin Item	Primary Location	Last Location	Route Seq ID	Unit of Measure	Qty on Hand	Qty per Kit	Total Qty	Qty Issued	Date Issued	Status
D3914-1		Manufactured	No			100	Each	12.0000	2	2			
D3914-1									**			13-08-15	PD
Rib													

Location		Loc Qty	Loc Code
WA004		8	B103404 → (2x)
	100751	6	
	88645	2	
WA005		4	
	81449	1	
	82131	1	
	87079	1	
	97660	1	

D3914-7		Manufactured	No			100	Each	13.0000	2	2			
D3914-7									**			13-08-15	PD
Rib													

Location		Loc Qty	Loc Code
WA004		8	B103363 → (2x)
	100888	8	
WA005		5	
	82928	3	
	88649	1	
	97949	1	

DQA: _____ Date: _____

NCR: Yes / No

WORK ORDER NON-CONFORMANCE / UPDATE

QA Closed: Date:

Work Order: _____

Part No. _____

NCR No. _____

DISPOSITION

- Rework ☐
- Scrap ☐
- Use-as-is ☐
- Work Order Update ☐

AGAINST DEPARTMENT/PROCESS

- Skid-tube ☐
- Machining ☐
- Thermoforming ☐
- Large Fab ☐
- Crosstube ☐
- Small Fab ☐
- Finishing ☐
- Composite ☐
- Water Jet ☐
- Prod. Eng. Coor. ☐
- Rec/Store/Packaging ☐
- Supplier ☐
- Engineering ☐
- Quality ☐
- Other ☐

Root Cause		Date	Step	Qty	Description of work order update or Non-conformance	Initial Chief Eng	Action Description	Sign & Date	Verification	QC Inspector
Doc/Data	☐									
Equip/Tooling	☐									
Operator	☐									
Material	☐									
Setup	☐									
Other	☐									
Process	☐									
Supplier	☐									
Training	☐									
Unapproved	☐									

FAULT CATEGORY

Landing Gear

- ☐ Bending
- ☐ Centre Not Concentric to O/S
- ☐ Cracks
- ☐ Crushed/Crimped
- ☐ Cuffs
- ☐ Heat Treat
- ☐ Inspection Strip in Tube
- ☐ Ripples in Bend
- ☐ Torque Waves in Extrusion
- ☐ Turning Sequence
- ☐ Wave/Twist in Tube

General

- ☐ Bend
- ☐ BOM/Route
- ☐ Broken/Damaged
- ☐ Burrs
- ☐ Contamination
- ☐ Countersink
- ☐ Cut Too Short
- ☐ Drill Holes
- ☐ Drawing
- ☐ Finish
- ☐ Folio
- ☐ Grain
- ☐ Hardware
- ☐ Inspection Incomplete
- ☐ Instructions Incomplete/Unclear
- ☐ Maintenance
- ☐ Mislabeled
- ☐ Misread
- ☐ Offset
- ☐ Out of Calibration
- ☐ Out of Sequence
- ☐ Outside Dimensions
- ☐ Ovalized
- ☐ Over/Under tolerance
- ☐ Part Incorrect
- ☐ Part Lost/Missing
- ☐ Part Moved
- ☐ Positioned Wrong
- ☐ Power Loss/Surge
- ☐ Pressure/Forced
- ☐ Temperature/Cure
- ☐ Weld
- ☐ Wrong Stock Pulled
- ☐ Other

_____

_____

_____

Picklist Print

Monday, June 24, 2013 11:44:52 AM

Work Order ID: 103391 *103391*

Parent Item: D3914-041 *D3914-041*

Parent Item Name: Long Basket Lid Assembly (350)

Start Date: 6/24/2013 **Required Date:** 7/5/2013

Start Qty: 1.00 **Required Qty:** 1.00

D4018-5	Manufactured	No		100	Each	36.0000	9	9

D4018-5

Rib

**

13-08-15 PD

Location	Loc Qty	Loc Code
WA004	36	B97693 → (9x)
100348	36	

D4035-043	Manufactured	No		100	Each	14.0000	2	2

D4035-043

Lid Rib Assembly, Aft (350 Basket)

**

13-08-15 PD

Location	Loc Qty	Loc Code
WA004	7	B103960 → (2x)
97078	1	
97686	1	
97687	5	
WA005	7	
81202	1	
81452	1	
82988	1	
98841	4	

D2581	Manufactured	No		100	Each	26.0000	2	2

D2581

Mounting Bracket

**

13-08-15 PD

Location	Loc Qty	Loc Code
WA004	26	B103100 → (2x)
101383	12	
70766	2	
81253	1	
82506	2	
83230	3	
85452	2	
87706	2	
99837	2	

DQA: _____ Date: _____

NCR: Yes / No

WORK ORDER NON-CONFORMANCE / UPDATE

QA Closed: Date:

Work Order: _____

Part No. _____

NCR No. _____

DISPOSITION

- Rework ☐
- Scrap ☐
- Use-as-is ☐
- Work Order Update ☐

AGAINST DEPARTMENT/PROCESS

- Skid-tube ☐
- Machining ☐
- Thermoforming ☐
- Large Fab ☐
- Crosstube ☐
- Small Fab ☐
- Finishing ☐
- Composite ☐
- Water Jet ☐
- Prod. Eng. Coor. ☐
- Rec/Store/Packaging ☐
- Supplier ☐
- Engineering ☐
- Quality ☐
- Other ☐
- ☐

Root Cause		Date	Step	Qty	Description of work order update or Non-conformance	Initial Chief Eng	Action Description	Sign & Date	Verification	QC Inspector
Doc/Data	☐									
Equip/Tooling	☐									
Operator	☐									
Material	☐									
Setup	☐									
Other	☐									
Process	☐									
Supplier	☐									
Training	☐									
Unapproved	☐									

FAULT CATEGORY

Landing Gear

- ☐ Bending
- ☐ Centre Not Concentric to O/S
- ☐ Cracks
- ☐ Crushed/Crimped
- ☐ Cuffs
- ☐ Heat Treat
- ☐ Inspection Strip in Tube
- ☐ Ripples in Bend
- ☐ Torque Waves in Extrusion
- ☐ Turning Sequence
- ☐ Wave/Twist in Tube

General

- ☐ Bend
- ☐ BOM/Route
- ☐ Broken/Damaged
- ☐ Burrs
- ☐ Contamination
- ☐ Countersink
- ☐ Cut Too Short
- ☐ Drill Holes
- ☐ Drawing
- ☐ Finish
- ☐ Folio
- ☐ Grain
- ☐ Hardware
- ☐ Inspection Incomplete
- ☐ Instructions Incomplete/Unclear
- ☐ Maintenance
- ☐ Mislabeled
- ☐ Misread
- ☐ Offset
- ☐ Out of Calibration
- ☐ Out of Sequence
- ☐ Outside Dimensions
- ☐ Ovalized
- ☐ Over/Under tolerance
- ☐ Part Incorrect
- ☐ Part Lost/Missing
- ☐ Part Moved
- ☐ Positioned Wrong
- ☐ Power Loss/Surge
- ☐ Pressure/Forced
- ☐ Temperature/Cure
- ☐ Weld
- ☐ Wrong Stock Pulled
- ☐ Other

_____

_____

_____

Picklist Print

Monday, June 24, 2013 11:44:52 AM

Work Order ID: 103391 *103391*

Parent Item: D3914-041 *D3914-041*

Parent Item Name: Long Basket Lid Assembly (350)

Start Date: 6/24/2013 **Required Date:** 7/5/2013

Start Qty: 1.00 **Required Qty:** 1.00

D2728-3	Manufactured	No	140	Each	0.0000	0	0	
D2728-3						**		
Dart Logo label large								
D4016-3	Manufactured	No	100	Each	38.0000	3	3	
D4016-3						**		B.06.15 PD
Hinge Half, Lid								

Location	Loc Qty	Loc Code
WA004	38	104365 → 3x
101043	20	
102214	8	
94755	8	
95563	2	

D4020-5	Manufactured	No	100	Each	4.0000	1	1	
D4020-5						**		B.06.15 PD
Mesh (350 Basket Long, Lid)								

Location	Loc Qty	Loc Code
WA007	4	B93400 → (1)
92695	3	
96611	1	

D4021-3	Manufactured	No	100	Each	62.0000	1	1	
D4021-3						**		B.06.15 PD
Data Plate								

Location	Loc Qty	Loc Code
WA004	62	
101346	52	1x
80897	9	
82507	1	

DQA: _____ Date: _____

NCR: Yes / No

WORK ORDER NON-CONFORMANCE / UPDATE

QA Closed: Date:

Work Order: _____

Part No. _____

NCR No. _____

DISPOSITION

- Rework ☐
- Scrap ☐
- Use-as-is ☐
- Work Order Update ☐

AGAINST DEPARTMENT/PROCESS

- Skid-tube ☐
- Machining ☐
- Thermoforming ☐
- Large Fab ☐
- Crosstube ☐
- Small Fab ☐
- Finishing ☐
- Composite ☐
- Water Jet ☐
- Prod. Eng. Coor. ☐
- Rec/Store/Packaging ☐
- Supplier ☐
- Engineering ☐
- Quality ☐
- Other ☐

Root Cause		Date	Step	Qty	Description of work order update or Non-conformance	Initial Chief Eng	Action Description	Sign & Date	Verification	QC Inspector
Doc/Data	☐									
Equip/Tooling	☐									
Operator	☐									
Material	☐									
Setup	☐									
Other	☐									
Process	☐									
Supplier	☐									
Training	☐									
Unapproved	☐									

FAULT CATEGORY

Landing Gear

- ☐ Bending
- ☐ Centre Not Concentric to O/S
- ☐ Cracks
- ☐ Crushed/Crimped
- ☐ Cuffs
- ☐ Heat Treat
- ☐ Inspection Strip in Tube
- ☐ Ripples in Bend
- ☐ Torque Waves in Extrusion
- ☐ Turning Sequence
- ☐ Wave/Twist in Tube

General

- ☐ Bend
- ☐ BOM/Route
- ☐ Broken/Damaged
- ☐ Burrs
- ☐ Contamination
- ☐ Countersink
- ☐ Cut Too Short
- ☐ Drill Holes
- ☐ Drawing
- ☐ Finish
- ☐ Folio
- ☐ Grain
- ☐ Hardware
- ☐ Inspection Incomplete
- ☐ Instructions Incomplete/Unclear
- ☐ Maintenance
- ☐ Mislabeled
- ☐ Misread
- ☐ Offset
- ☐ Out of Calibration
- ☐ Out of Sequence
- ☐ Outside Dimensions
- ☐ Ovalized
- ☐ Over/Under tolerance
- ☐ Part Incorrect
- ☐ Part Lost/Missing
- ☐ Part Moved
- ☐ Positioned Wrong
- ☐ Power Loss/Surge
- ☐ Pressure/Forced
- ☐ Temperature/Cure
- ☐ Weld
- ☐ Wrong Stock Pulled
- ☐ Other _____

ITEM	QTY -041	P/N	DESCRIPTION
	X	D3914-041	LONG BASKET LID ASSY (350)
1	1	D3914-101	TUBULAR ASSY, LONG LID
2	2	D2581	MOUNTING BRACKET
3	1	D2728-3	DART LOGO LABEL
4	3	D4016-3	HINGE HALF, LID
5	1	D4020-5	LID MESH, 350 LONG BASKET
6	1	D4021-3	DATA PLATE

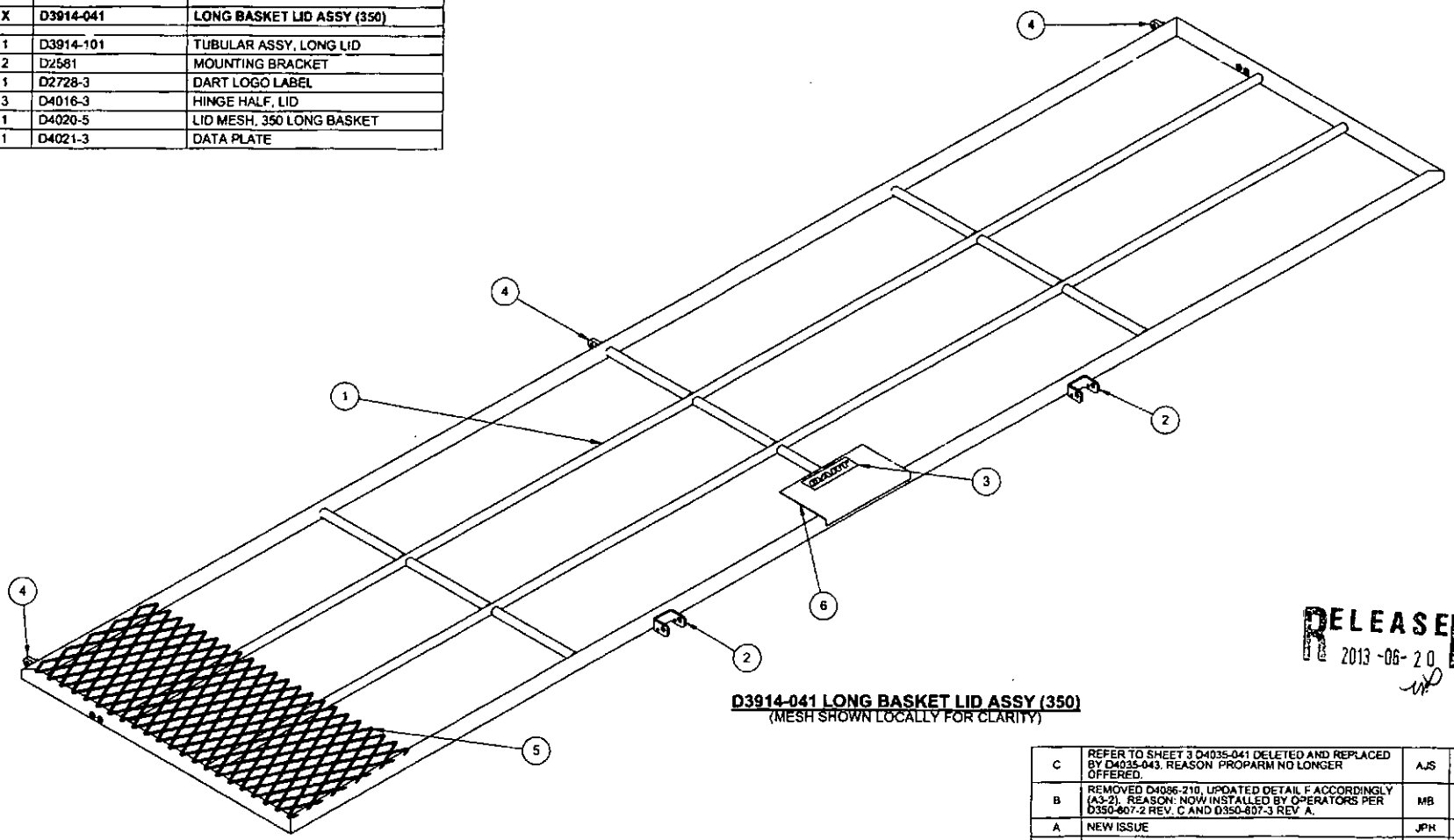

D3914-041 LONG BASKET LID ASSY (350)
(MESH SHOWN LOCALLY FOR CLARITY)

RELEASED
2013 -06- 20

REV.	DESCRIPTION	BY	DATE
C	REFER TO SHEET 3 D4035-041 DELETED AND REPLACED BY D4035-043. REASON PROPARM NO LONGER OFFERED.	AJS	13.03.13
B	REMOVED D4086-210, UPDATED DETAIL F ACCORDINGLY (A3-2). REASON: NOW INSTALLED BY OPERATORS PER D350-807-2 REV. C AND D350-807-3 REV. A.	MB	10.08.05
A	NEW ISSUE	JPH	10.03.16

DESIGN	AJS	DART AEROSPACE LTD	
DRAWN	AJS	HAWKESBURY, ONTARIO, CANADA	
CHECKED	A.P.	DRAWING NO. D3914	REV. C
MFG. APPR.			SHEET 1 OF 4
APPROVED		TITLE LONG BASKET LID ASSY (350)	SCALE NTS
DE APPR.			
DATE 13.03.13		COPYRIGHT © 2010 BY DART AEROSPACE LTD	

DQA: _____ Date: _____

NCR: Yes / No

WORK ORDER NON-CONFORMANCE / UPDATE

QA Closed: Date:

Work Order: _____

Part No. _____

NCR No. _____

DISPOSITION

- Rework ☐
- Scrap ☐
- Use-as-is ☐
- Work Order Update ☐

AGAINST DEPARTMENT/PROCESS

- Skid-tube ☐
- Crosstube ☐
- Water Jet ☐
- Engineering ☐
- Machining ☐
- Small Fab ☐
- Prod. Eng. Coor. ☐
- Quality ☐
- Thermoforming ☐
- Finishing ☐
- Rec/Store/Packaging ☐
- Other ☐
- Large Fab ☐
- Composite ☐
- Supplier ☐

Root Cause		Date	Step	Qty	Description of work order update or Non-conformance	Initial Chief Eng	Action Description	Sign & Date	Verification	QC Inspector
Doc/Data	☐									
Equip/Tooling	☐									
Operator	☐									
Material	☐									
Setup	☐									
Other	☐									
Process	☐									
Supplier	☐									
Training	☐									
Unapproved	☐									

FAULT CATEGORY

Landing Gear

- ☐ Bending
- ☐ Centre Not Concentric to O/S
- ☐ Cracks
- ☐ Crushed/Crimped
- ☐ Cuffs
- ☐ Heat Treat
- ☐ Inspection Strip in Tube
- ☐ Ripples in Bend
- ☐ Torque Waves in Extrusion
- ☐ Turning Sequence
- ☐ Wave/Twist in Tube

General

- ☐ Bend
- ☐ BOM/Route
- ☐ Broken/Damaged
- ☐ Burrs
- ☐ Contamination
- ☐ Countersink
- ☐ Cut Too Short
- ☐ Drill Holes
- ☐ Drawing
- ☐ Finish
- ☐ Folio
- ☐ Grain
- ☐ Hardware
- ☐ Inspection Incomplete
- ☐ Instructions Incomplete/Unclear
- ☐ Maintenance
- ☐ Mislabeled
- ☐ Misread
- ☐ Offset
- ☐ Out of Calibration
- ☐ Out of Sequence
- ☐ Outside Dimensions
- ☐ Ovalized
- ☐ Over/Under tolerance
- ☐ Part Incorrect
- ☐ Part Lost/Missing
- ☐ Part Moved
- ☐ Positioned Wrong
- ☐ Power Loss/Surge
- ☐ Pressure/Forced
- ☐ Temperature/Cure
- ☐ Weld
- ☐ Wrong Stock Pulled
- ☐ Other _____

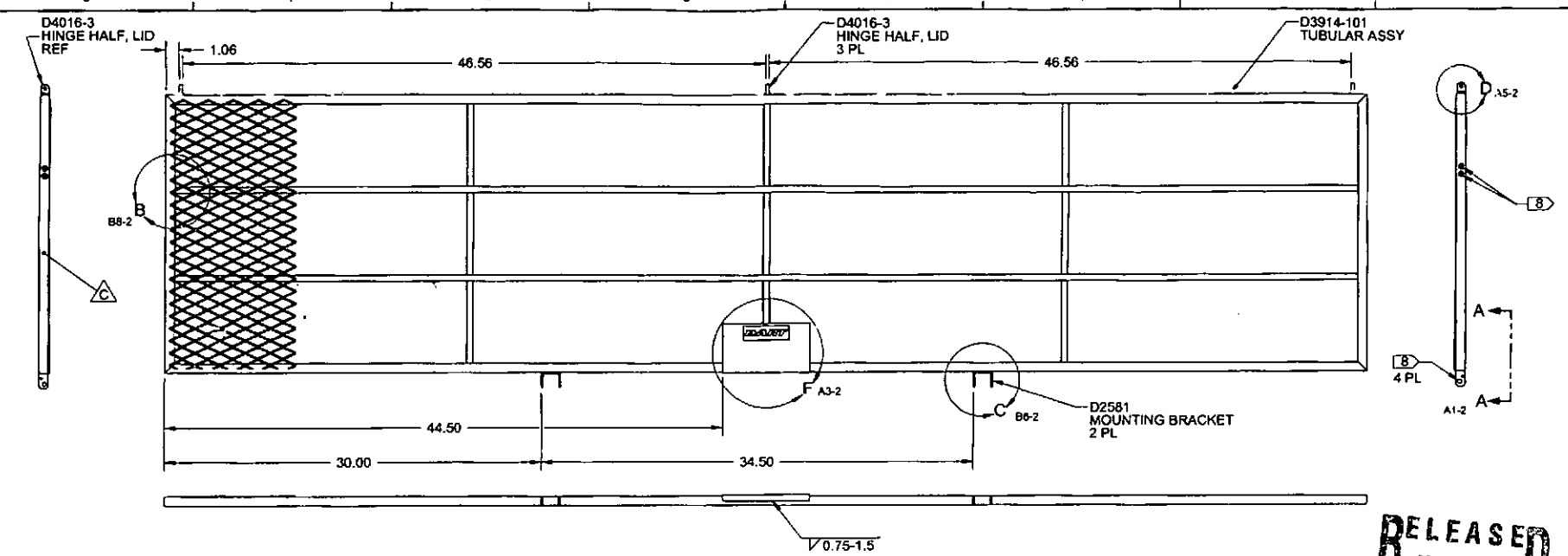

RELEASED
2013 -06- 20

D3914-041 LONG BASKET LID ASSY (350)

(MESH SHOWN LOCALLY FOR CLARITY)

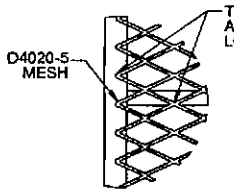

DETAIL B D8-2

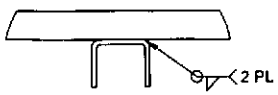

DETAIL C C3-2

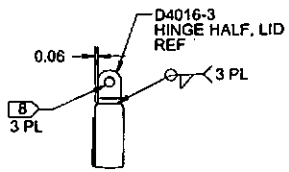

DETAIL D D1-2

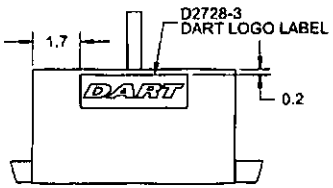

DETAIL F C4-2

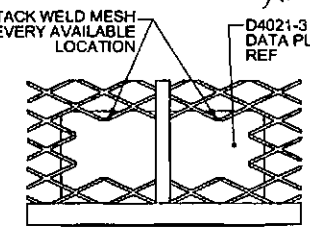

VIEW A-A C1-2

NOTES:
1) MATERIAL: N/A
2) FINISH: POWDER COAT BLACK SANDTEX (4.3.5.7) PER DART QSI 005 4.3
APPLY BLACK ANTI-SKID PAINT TO OUTSIDE SURFACE OF MESH PER DART QSI 005 4.4
3) TOLERANCES: PER DART QSI 018 UNLESS OTHERWISE NOTED
4) UNITS: INCHES UNLESS OTHERWISE NOTED
5) BREAK SHARP EDGES: N/A
6) IDENTIFICATION: N/A
7) WEIGHT: 22.35 lbs APPROX
8) MASK HOLES PRIOR TO FINISHING
9) WELD PER DART QSI 004

DESIGN	AJS	DART AEROSPACE LTD
DRAWN	AJS	HAWKESBURY, ONTARIO, CANADA
CHECKED		DRAWING NO. D3914 REV. C
MFG. APPR.		SHEET 2 OF 4
APPROVED		TITLE LONG BASKET LID ASSY (350) SCALE NTS
DE APPR.		
DATE	13.03.13	

COPYRIGHT © 2010 BY DART AEROSPACE LTD

DQA: _____ Date: _____

NCR: Yes / No

WORK ORDER NON-CONFORMANCE / UPDATE

QA Closed: Date:

Work Order: _____

Part No. _____

NCR No. _____

DISPOSITION

- Rework ☐
- Scrap ☐
- Use-as-is ☐
- Work Order Update ☐

AGAINST DEPARTMENT/PROCESS

- Skid-tube ☐
- Machining ☐
- Thermoforming ☐
- Large Fab ☐
- Crosstube ☐
- Small Fab ☐
- Finishing ☐
- Composite ☐
- Water Jet ☐
- Prod. Eng. Coor. ☐
- Rec/Store/Packaging ☐
- Supplier ☐
- Engineering ☐
- Quality ☐
- Other ☐

Root Cause		Date	Step	Qty	Description of work order update or Non-conformance	Initial Chief Eng	Action Description	Sign & Date	Verification	QC Inspector
Doc/Data	☐									
Equip/Tooling	☐									
Operator	☐									
Material	☐									
Setup	☐									
Other	☐									
Process	☐									
Supplier	☐									
Training	☐									
Unapproved	☐									

FAULT CATEGORY

Landing Gear

- ☐ Bending
- ☐ Centre Not Concentric to O/S
- ☐ Cracks
- ☐ Crushed/Crimped
- ☐ Cuffs
- ☐ Heat Treat
- ☐ Inspection Strip in Tube
- ☐ Ripples in Bend
- ☐ Torque Waves in Extrusion
- ☐ Turning Sequence
- ☐ Wave/Twist in Tube

General

- ☐ Bend
- ☐ BOM/Route
- ☐ Broken/Damaged
- ☐ Burrs
- ☐ Contamination
- ☐ Countersink
- ☐ Cut Too Short
- ☐ Drill Holes
- ☐ Drawing
- ☐ Finish
- ☐ Folio
- ☐ Grain
- ☐ Hardware
- ☐ Inspection Incomplete
- ☐ Instructions Incomplete/Unclear
- ☐ Maintenance
- ☐ Mislabeled
- ☐ Misread
- ☐ Offset
- ☐ Out of Calibration
- ☐ Out of Sequence
- ☐ Outside Dimensions
- ☐ Ovalized
- ☐ Over/Under tolerance
- ☐ Part Incorrect
- ☐ Part Lost/Missing
- ☐ Part Moved
- ☐ Positioned Wrong
- ☐ Power Loss/Surge
- ☐ Pressure/Forced
- ☐ Temperature/Cure
- ☐ Weld
- ☐ Wrong Stock Pulled
- ☐ Other _____

ITEM	QTY -101	P/N	DESCRIPTION
	X	D3914-101	TUBULAR ASSY, LONG LID (350)
1	2	D3914-1	RIB
2	2	D3914-7	RIB
3	9	D4018-5	RIB
4	2	D4035-043	BASKET LID RIB ASSY, AFT

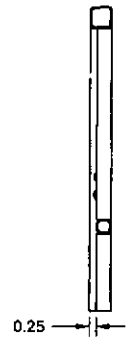

SECTION E-E C5-3

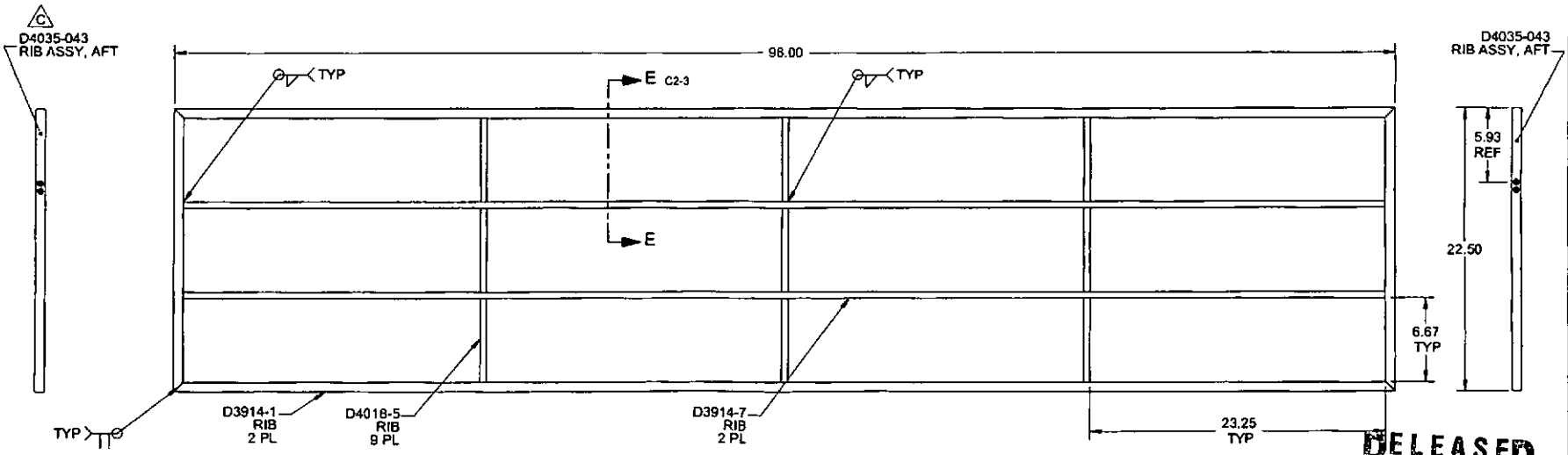

8 D3914-101 TUBULAR ASSY, LONG LID

RELEASED
2013 -06- 20

NOTES:
1) MATERIAL: N/A
2) FINISH: NONE
3) TOLERANCES: PER DART QSI 018 UNLESS OTHERWISE NOTED
4) UNITS: INCHES UNLESS OTHERWISE NOTED
5) BREAK SHARP EDGES: N/A
6) IDENTIFICATION: N/A
7) WEIGHT: 14.10 lbs
8) TOLERANCE FOR XX.XX DIMENSIONS ±0.06 FOR D3914-101
9) WELD PER DART QSI 004

DESIGN	AJS
DRAWN	AJS
CHECKED	
MFG. APPR.	
APPROVED	
DE APPR.	
DATE	13.03.13

DART AEROSPACE LTD
HAWKESBURY, ONTARIO, CANADA

DRAWING NO. D3914 REV. C
SHEET 3 OF 4

TITLE LONG BASKET LID ASSY (350) SCALE NTS

COPYRIGHT © 2010 BY DART AEROSPACE LTD

DQA: _____ Date: _____

NCR: Yes / No

WORK ORDER NON-CONFORMANCE / UPDATE

QA Closed: Date:

Work Order: _____

Part No. _____

NCR No. _____

DISPOSITION

- Rework ☐
- Scrap ☐
- Use-as-is ☐
- Work Order Update ☐

AGAINST DEPARTMENT/PROCESS

- Skid-tube ☐
- Machining ☐
- Thermoforming ☐
- Large Fab ☐
- Crosstube ☐
- Small Fab ☐
- Finishing ☐
- Composite ☐
- Water Jet ☐
- Prod. Eng. Coor. ☐
- Rec/Store/Packaging ☐
- Supplier ☐
- Engineering ☐
- Quality ☐
- Other ☐
- ☐

Root Cause		Date	Step	Qty	Description of work order update or Non-conformance	Initial Chief Eng	Action Description	Sign & Date	Verification	QC Inspector
Doc/Data	☐									
Equip/Tooling	☐									
Operator	☐									
Material	☐									
Setup	☐									
Other	☐									
Process	☐									
Supplier	☐									
Training	☐									
Unapproved	☐									

FAULT CATEGORY

Landing Gear

- ☐ Bending
- ☐ Centre Not Concentric to O/S
- ☐ Cracks
- ☐ Crushed/Crimped
- ☐ Cuffs
- ☐ Heat Treat
- ☐ Inspection Strip in Tube
- ☐ Ripples in Bend
- ☐ Torque Waves in Extrusion
- ☐ Turning Sequence
- ☐ Wave/Twist in Tube

General

- ☐ Bend
- ☐ BOM/Route
- ☐ Broken/Damaged
- ☐ Burrs
- ☐ Contamination
- ☐ Countersink
- ☐ Cut Too Short
- ☐ Drill Holes
- ☐ Drawing
- ☐ Finish
- ☐ Folio
- ☐ Grain
- ☐ Hardware
- ☐ Inspection Incomplete
- ☐ Instructions Incomplete/Unclear
- ☐ Maintenance
- ☐ Mislabeled
- ☐ Misread
- ☐ Offset
- ☐ Out of Calibration
- ☐ Out of Sequence
- ☐ Outside Dimensions
- ☐ Ovalized
- ☐ Over/Under tolerance
- ☐ Part Incorrect
- ☐ Part Lost/Missing
- ☐ Part Moved
- ☐ Positioned Wrong
- ☐ Power Loss/Surge
- ☐ Pressure/Forced
- ☐ Temperature/Cure
- ☐ Weld
- ☐ Wrong Stock Pulled
- ☐ Other _____

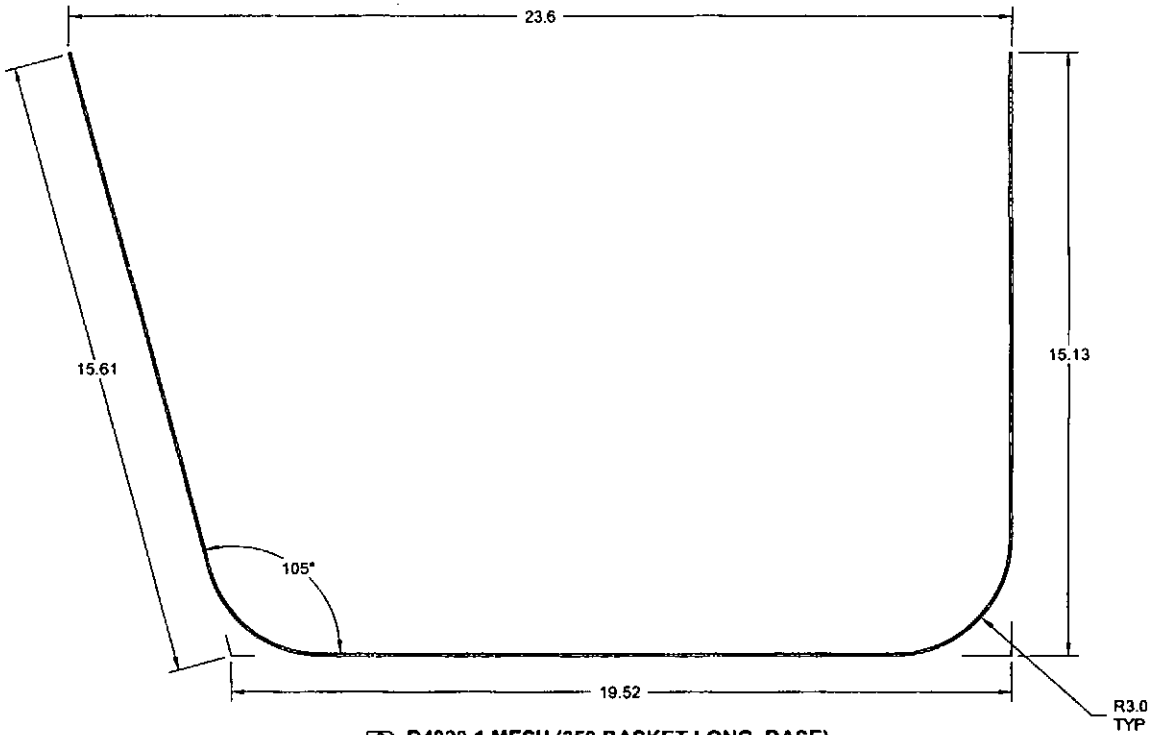

9 **D4020-1 MESH (350 BASKET LONG, BASE)**
(SEE D4020-1F FOR LENGTH)

9 **D4020-3 (350 BASKET SHORT, BASE)**
(SEE D4020-3F FOR LENGTH)

RELEASED
2010 -03- 12

NOTES:
1) MATERIAL -1: MAKE FROM D4020-1F
-3: MAKE FROM D4020-3F
2) FINISH: NONE
3) TOLERANCES: PER DART QSI 018 UNLESS OTHERWISE NOTED
4) UNITS: INCHES UNLESS OTHERWISE NOTED
5) BREAK SHARP EDGES: N/A
6) IDENTIFICATION: N/A
7) WEIGHT: SEE D4020-1F & D4020-3F
8) LOCAL TRIM MAY BE NECESSARY TO CLEAR FASTENERS/STRUCTURE SEE NEXT ASSY FOR DETAILS
9) PRE-FORMING OF MESH PER SHOP OPTION, THIS VIEW MAY BE USED FOR REF ONLY

REV.	DESCRIPTION	BY	DATE
A	NEW ISSUE	JPH	10.03.04

DESIGN	AJS	DART AEROSPACE LTD HAWKESBURY, ONTARIO, CANADA
DRAWN	JPH	
CHECKED		DRAWING NO. D4020 REV. A
MFG. APPR.		SHEET 1 OF 4
APPROVED		TITLE 350 BASKET MESH (BASE) SCALE NTS
DE APPR.		
DATE	10.03.04	

COPYRIGHT © 2010 BY DART AEROSPACE LTD
THIS DOCUMENT IS PRIVATE AND CONFIDENTIAL AND IS SUPPLIED ON THE EXPRESS CONDITION THAT IT IS NOT TO BE USED FOR ANY PURPOSE OR COPIED OR COMMUNICATED TO ANY OTHER PERSON WITHOUT WRITTEN PERMISSION FROM DART AEROSPACE LTD.

DQA: _____ Date: _____

NCR: Yes / No

WORK ORDER NON-CONFORMANCE / UPDATE

QA Closed: Date:

Work Order: _____

Part No. _____

NCR No. _____

DISPOSITION

- Rework ☐
- Scrap ☐
- Use-as-is ☐
- Work Order Update ☐

AGAINST DEPARTMENT/PROCESS

- Skid-tube ☐
- Machining ☐
- Thermoforming ☐
- Large Fab ☐
- Crosstube ☐
- Small Fab ☐
- Finishing ☐
- Composite ☐
- Water Jet ☐
- Prod. Eng. Coor. ☐
- Rec/Store/Packaging ☐
- Supplier ☐
- Engineering ☐
- Quality ☐
- Other ☐
- ☐

Root Cause		Date	Step	Qty	Description of work order update or Non-conformance	Initial Chief Eng	Action Description	Sign & Date	Verification	QC Inspector
Doc/Data	☐									
Equip/Tooling	☐									
Operator	☐									
Material	☐									
Setup	☐									
Other	☐									
Process	☐									
Supplier	☐									
Training	☐									
Unapproved	☐									

FAULT CATEGORY

Landing Gear

- ☐ Bending
- ☐ Centre Not Concentric to O/S
- ☐ Cracks
- ☐ Crushed/Crimped
- ☐ Cuffs
- ☐ Heat Treat
- ☐ Inspection Strip in Tube
- ☐ Ripples in Bend
- ☐ Torque Waves in Extrusion
- ☐ Turning Sequence
- ☐ Wave/Twist in Tube

General

- ☐ Bend
- ☐ BOM/Route
- ☐ Broken/Damaged
- ☐ Burrs
- ☐ Contamination
- ☐ Countersink
- ☐ Cut Too Short
- ☐ Drill Holes
- ☐ Drawing
- ☐ Finish
- ☐ Folio
- ☐ Grain
- ☐ Hardware
- ☐ Inspection Incomplete
- ☐ Instructions Incomplete/Unclear
- ☐ Maintenance
- ☐ Mislabeled
- ☐ Misread
- ☐ Offset
- ☐ Out of Calibration
- ☐ Out of Sequence
- ☐ Outside Dimensions
- ☐ Ovalized
- ☐ Over/Under tolerance
- ☐ Part Incorrect
- ☐ Part Lost/Missing
- ☐ Part Moved
- ☐ Positioned Wrong
- ☐ Power Loss/Surge
- ☐ Pressure/Forced
- ☐ Temperature/Cure
- ☐ Weld
- ☐ Wrong Stock Pulled
- ☐ Other

_____

_____

_____

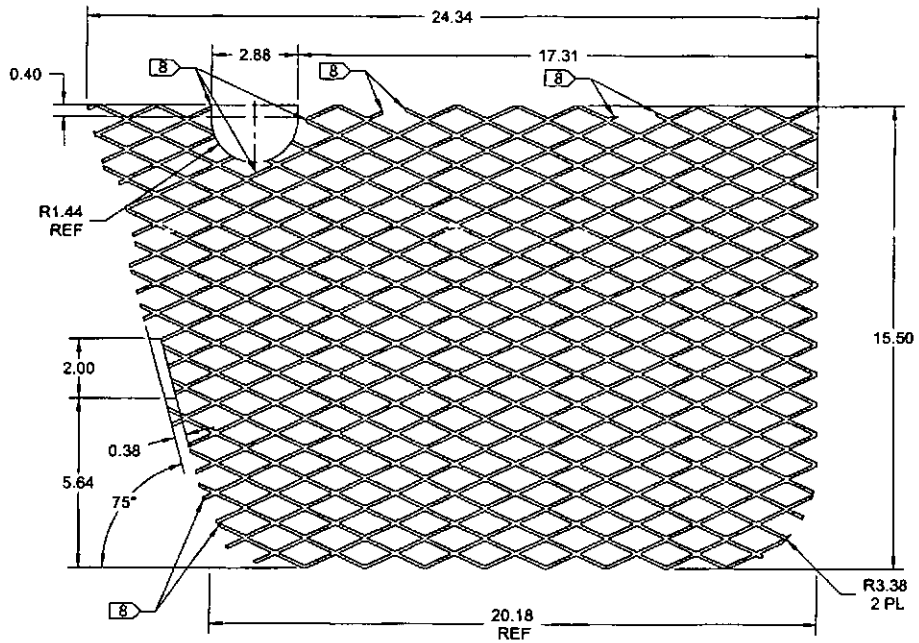

9 **D4020-11 END MESH, BASKET**

RELEASED
2010 -03- 12

NOTES:
1) MATERIAL: AISI 304/316 EXPANDED STAINLESS STEEL MESH 3/4-16F
REF DART SPEC. M304EX0.75-16F
2) FINISH: NONE
3) TOLERANCES: PER DART QSI 018 UNLESS OTHERWISE NOTED
4) UNITS: INCHES UNLESS OTHERWISE NOTED
5) BREAK SHARP EDGES: N/A
6) IDENTIFICATION: N/A
7) WEIGHT: 1.22 lbs
8) LOCAL TRIM MAY BE NECESSARY TO CLEAR FASTENERS/STRUCTURE SEE NEXT ASSY FOR DETAILS
9) TOLERANCE ON XX.XX DIMENSIONS ± 0.06.

DESIGN	AJS	**DART AEROSPACE LTD** HAWKESBURY, ONTARIO, CANADA
DRAWN	JPH	
CHECKED		DRAWING NO. D4020 REV. A
MFG. APPR.		SHEET 3 OF 4
APPROVED		TITLE 350 BASKET MESH (BASE) SCALE NTS
DE APPR.		
DATE	10.03.04	

COPYRIGHT © 2010 BY DART AEROSPACE LTD
THIS DOCUMENT IS PRIVATE AND CONFIDENTIAL AND IS SUPPLIED ON THE EXPRESS CONDITION THAT IT IS NOT TO BE USED FOR ANY PURPOSE OR COPIED OR DISSEMINATED TO ANY OTHER PERSON WITHOUT WRITTEN PERMISSION FROM DART AEROSPACE LTD

DQA: _____ Date: _____

NCR: Yes / No

WORK ORDER NON-CONFORMANCE / UPDATE

QA Closed: Date:

Work Order: _____

Part No. _____

NCR No. _____

DISPOSITION

- Rework ☐
- Scrap ☐
- Use-as-is ☐
- Work Order Update ☐

AGAINST DEPARTMENT/PROCESS

- Skid-tube ☐
- Machining ☐
- Thermoforming ☐
- Large Fab ☐
- Crosstube ☐
- Small Fab ☐
- Finishing ☐
- Composite ☐
- Water Jet ☐
- Prod. Eng. Coor. ☐
- Rec/Store/Packaging ☐
- Supplier ☐
- Engineering ☐
- Quality ☐
- Other ☐

Root Cause		Date	Step	Qty	Description of work order update or Non-conformance	Initial Chief Eng	Action Description	Sign & Date	Verification	QC Inspector
Doc/Data	☐									
Equip/Tooling	☐									
Operator	☐									
Material	☐									
Setup	☐									
Other	☐									
Process	☐									
Supplier	☐									
Training	☐									
Unapproved	☐									

FAULT CATEGORY

Landing Gear

- ☐ Bending
- ☐ Centre Not Concentric to O/S
- ☐ Cracks
- ☐ Crushed/Crimped
- ☐ Cuffs
- ☐ Heat Treat
- ☐ Inspection Strip in Tube
- ☐ Ripples in Bend
- ☐ Torque Waves in Extrusion
- ☐ Turning Sequence
- ☐ Wave/Twist in Tube

General

- ☐ Bend
- ☐ BOM/Route
- ☐ Broken/Damaged
- ☐ Burrs
- ☐ Contamination
- ☐ Countersink
- ☐ Cut Too Short
- ☐ Drill Holes
- ☐ Drawing
- ☐ Finish
- ☐ Folio
- ☐ Grain
- ☐ Hardware
- ☐ Inspection Incomplete
- ☐ Instructions Incomplete/Unclear
- ☐ Maintenance
- ☐ Mislabeled
- ☐ Misread
- ☐ Offset
- ☐ Out of Calibration
- ☐ Out of Sequence
- ☐ Outside Dimensions
- ☐ Ovalized
- ☐ Over/Under tolerance
- ☐ Part Incorrect
- ☐ Part Lost/Missing
- ☐ Part Moved
- ☐ Positioned Wrong
- ☐ Power Loss/Surge
- ☐ Pressure/Forced
- ☐ Temperature/Cure
- ☐ Weld
- ☐ Wrong Stock Pulled
- ☐ Other

_____

_____

_____

_____